U 67 - 910 - 02 - 01

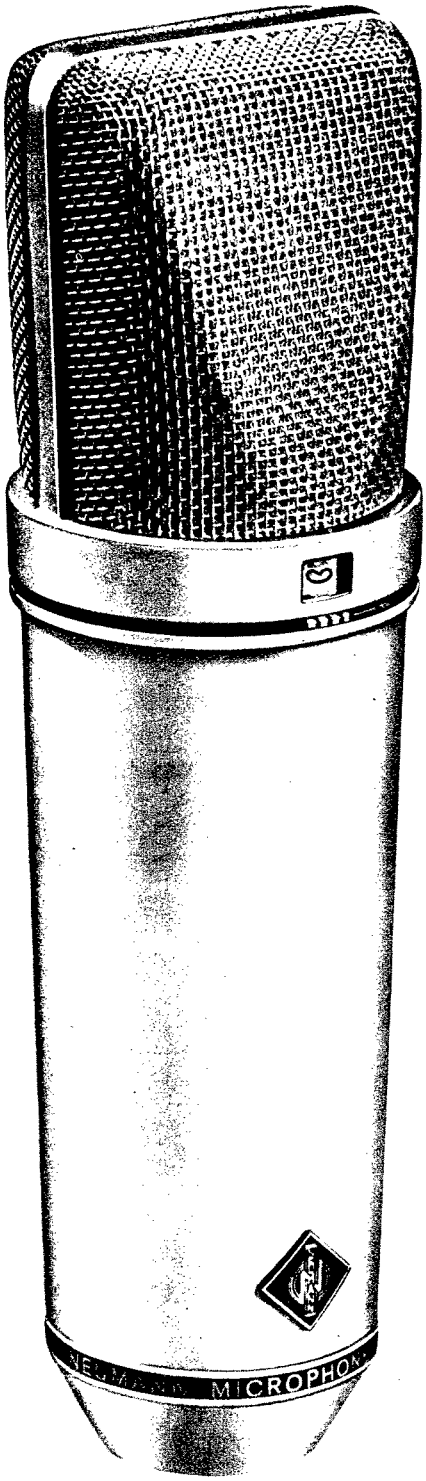

The U 67 Condenser-Microphone is a newly developed multi-purpose studio microphone. It has an attractive shape and possesses first-class trans - mission properties and a number of new advantages.

The U 67 Condenser-Microphone can be used in a multitude of cases in recording,broadcasting and sound reproduction.

GEORG NEUMANN GMBH · ELECTROACUSTIC · 1 BERLIN 61 (WEST)

323 März 66

Printed in Germany

SPECIAL FEATURES

From a dimension point of view it lies between the group of miniature microphones and that of the older standard type of condenser microphones. By relinguishing the absolute miniature type of construction, it is possible to use reliable standard components as well as an approved easily replaceable microphone amplifier tube with plug socket, a type which can be obtained all over the world.

By means of three switches, arranged at the base of the head assembly, the three directional characteristics, frequency response and transmission ratio can be adapted to requirements.

The frequency response of the microphone, also in the upper audio range, is practically linear for frontal sound pick-up and does not show the commonly found rise.This enables the microphone to be used especially at a short distance away from the sound source without getting an unnaturally sharp sound impression.

A new type of circuit considerably attenuates frequencies below 30 c/s already before the control grid of the microphone tube, whilst frequencies above 40 c/s are transmitted unaffected. The often feared overloading of the microphone tube caused by excessive movements of the membrane due to wind,floor vibrations etc. has thus been prevented. This was not possible with the commonly used rumble filters at the output.

If the bass attenuation exceptionally is not desired, frequency response of the microphone amplifier can be linearized by disconnecting a small wire bridge in the microphone.

The limit frequency of this bass attenuation can be shifted to 100 c/s by means of a switch located on the microphone (favourable e.g. for recording of speech or in television studios).

When the transmission degree of the microphone is reduced by appr. 10 dB by means of the third switch, the microphone amplifier will not be overloaded, even with the highest levels occuring in practice. (Application e.g. with pick-up of loud solo instruments from short distance.)

The microphone tube operates as an anode amplifier into an output transformer with separate feedback winding.

The microphones amplifier section may be opened easily without the aid of a screwdriver by unscrewing the fastening ring at its base in a counterclockwise direction. This permits the conical housing to be withdrawn. The head assembly may then be removed by pressing lightly against the two lengthwise support rails near the head assembly,releasing the latch and freeing the head assembly for unplugging.

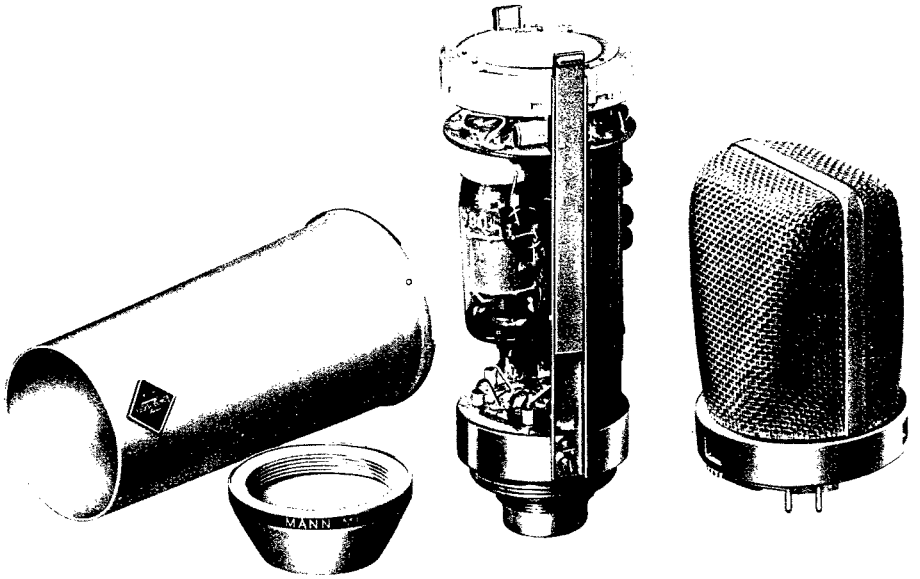

Cables up to 165 feet in length may be used between microphone and power supply. When longer cables are required, the filament potentiometer R 6 must be readjusted to bring the filament voltage at the microphone back to - 6,3 Volts.

Consistency of operations is also increased by the following measures :

Gold - sputtered polyester foils used as membranes make the unit highly insensitive to temperature, humidity, or aging.

Printed circuit used throughout for stability and shock resistance.

Great resistance to moisture due to potting of all grid circuit components and use of Teflon tube socket. Protection against RF interference through use of feed-through capacitors on all leads and RF protected connectors on interconnect cables.

A C C E S S O R I E S

POWER SUPPLY UNIT

The U 67 microphone may only be used with the NU 67 power supply. The filament voltage is made independent of mains voltage fluctuations by means of a power-type Zener diode. When the microphone is not connected the power supply unit need not be switched off. Above the plugs for microphone cable and A.F. output is a pair of plug sockets, which permit the application of a test voltage in series with a 60 resistor. For this purpose a voltage devider 10:1 has been inserted which steps up the input resistance of the test input to 600.The audio output socket is a three pole connector (Tuchel T 3081). The appropriate line connector (T 3080) will be supplied upon request. The unit is fitted with a standard equipment type mains input socket.

N U 6 7

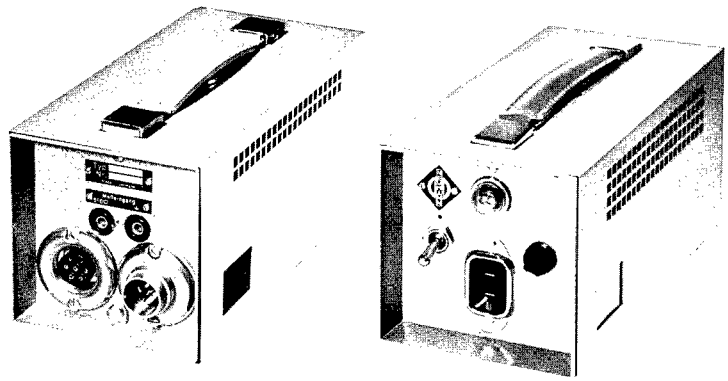

PLUG-IN POWER SUPPLY NUK

This power supply is designed as a plug - in unit of Unit Size 1 for built-in applications in racks or studio consoles. Filament current in this supply is electronically stabilized through use of a transistor.

MICROPHONE INTERCONNECT CABLES

Type UC 5	with Tuchel-connectors T 3460-10 + T 3461-10
Type UC 9	with Tuchel-connectors T 3460-10 + swivel microphone stand adapter Z 70-10 + NT3461-10
Type UC 7	with Tuchel-connectors T 3468-10 + T 3469-10 RF protected
Type UC 10	with Tuchel-connectors T 3468-10 + swivel microphone stand adapter Z 71-10 + NT3469-10

T E C H N I C A L D A T A

Acoustical System	Combination of two pressure transducers, electrically switchable to OMNI-DIRECTIONAL, CARDIOID and FIGURE-8
Frequency Range	30 ... 16 000 cps
Output levels	Omni-dir.: 1,1 mV/µb across 1000 Ω Cardioid : 2,0 mV/µb across 1000 Ω Figure-8 : 1,4 mV/µb across 1000 Ω
Electrical load resistance ...	≥1000 (250) Ω
Electrical source resistance ...	200 (50) Ω ± 20 % (60...15 000 cps)
Capicitance of capsule	approx. 1 x 50 pF (cardioid) approx. 2 x 50 pF (omni-dir. figure-8)
Stray Voltage	≤ 7 µV
Noise Voltage	≤ 5,5 µV (measured with DIN 45 405) ≙ 25 dB (cardioid) ≙ 28 dB (omni-dir.,figure 8) above 2 x 10^{-4} µb
Maximum sound pressure ..... for 0.5 % harmonic distortion at 40, 1000 and 5000 cps	≥125 µb = ≙ 116 dB (if initially attenuated, approx. 400 µb)
Amplification of preamplifier .. at 1 kcps	- 2,0 dB (cardioid) 0 dB(omni-dir.,figure 8)
Switchable attenuation	appr. 10 dB
Impedance of calibrating input .	600 unbalanced
Tubes	1 x EF 86
Dimensions	201 mm length 56 mm diameter
Weight	0.54 kg

The symbols near the switches below the microphone capsulé have the following meaning:

☐	flat response	full gain	☐
⌐	bass attenuation from 100 cps downwards	gain decreases (for high levels)	-10

POWER SUPPLY UNIT N U 6 7

Mains voltage	110/127/220/240 V ± 10 %
Fuse	0,16 /0,08 A
Consumption	approx. 9 watts
Output DC voltages	210 V (0,8 ... 1,0 A) 6,3 V (0,2 A)
Stray voltages	≤ 0,1 mV and ≤ 5 mV
Pilot lamp	Rafi 110 V No. 2855
Dimensions	220 x 100 x 120 mm
Weight	2,0 kg

MICROPHONE INTERCONNECT CABLES UC 5, UC 9, UC 7 and UC 10

Length	33 feet
Diameter	approx. 7 mm
Weight	
UC 5 and UC 9	1000 g
UC 7 and UC 10	1400 g
Thread in the microphone stand adapter	1/2" (5/8" - 27)

U 67

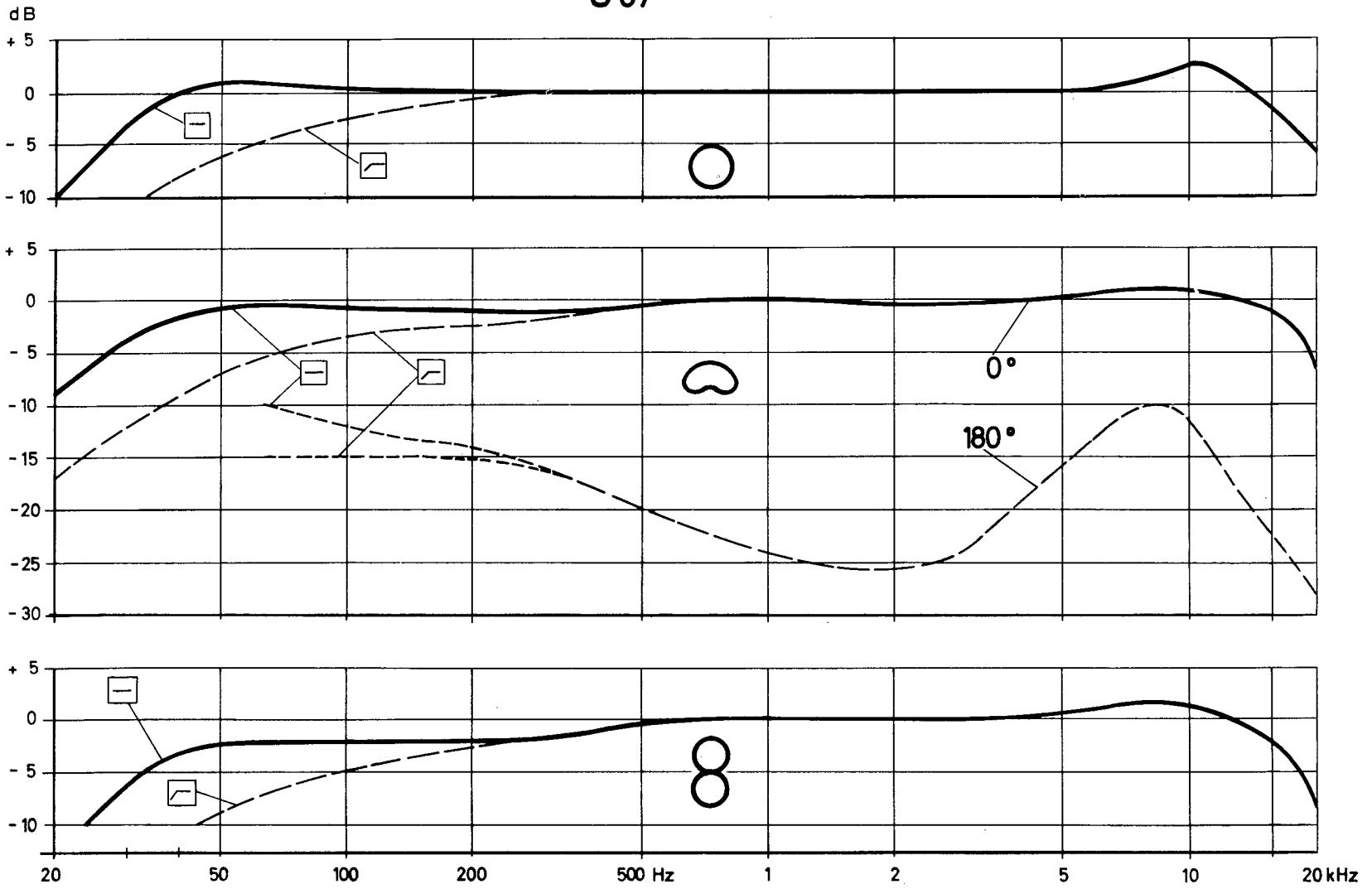
dB
+ 5
0
- 5
- 10
+ 5
0
- 5
- 10
- 15
- 20
- 25
- 30
0°
180°
+ 5
0
- 5
- 10
20
50
100
200
500 Hz
1
2
5
10
20 kHz

U 67

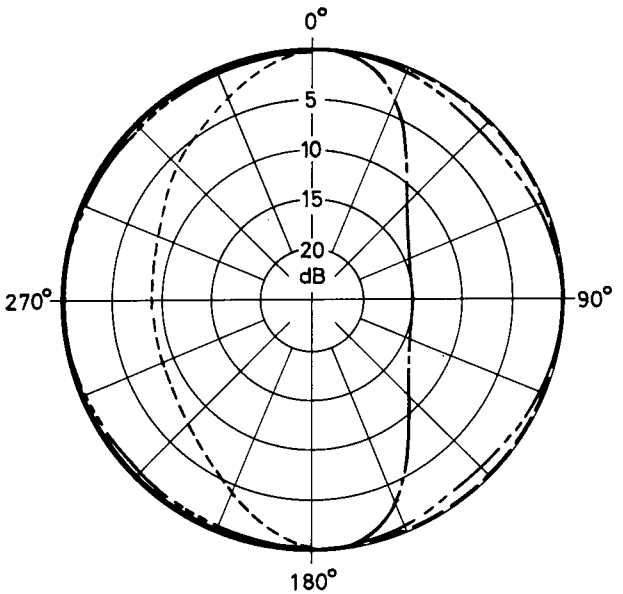

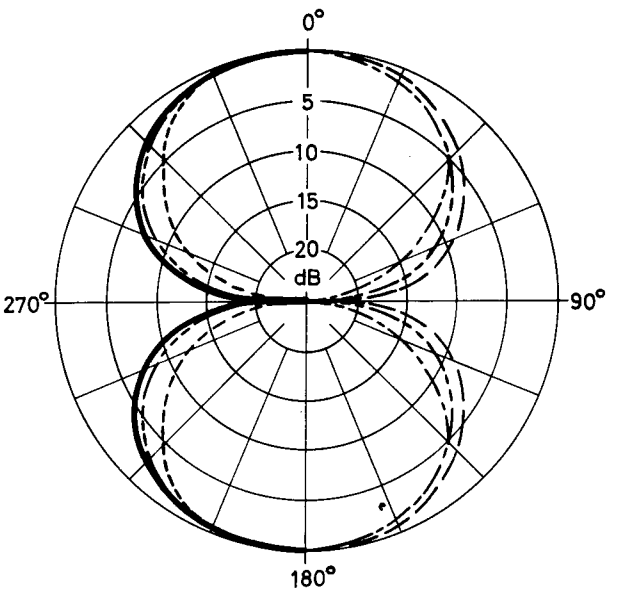

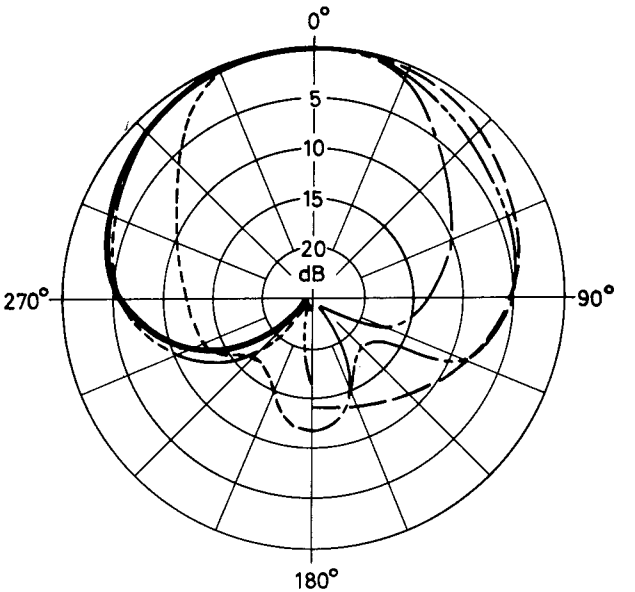

— — —	125 Hz
━━━	1 kHz
— - - —	4 kHz
— - - —	8 kHz
- - - - - -	10 kHz
—·—·—	12,5 kHz

U67-00-02-00K